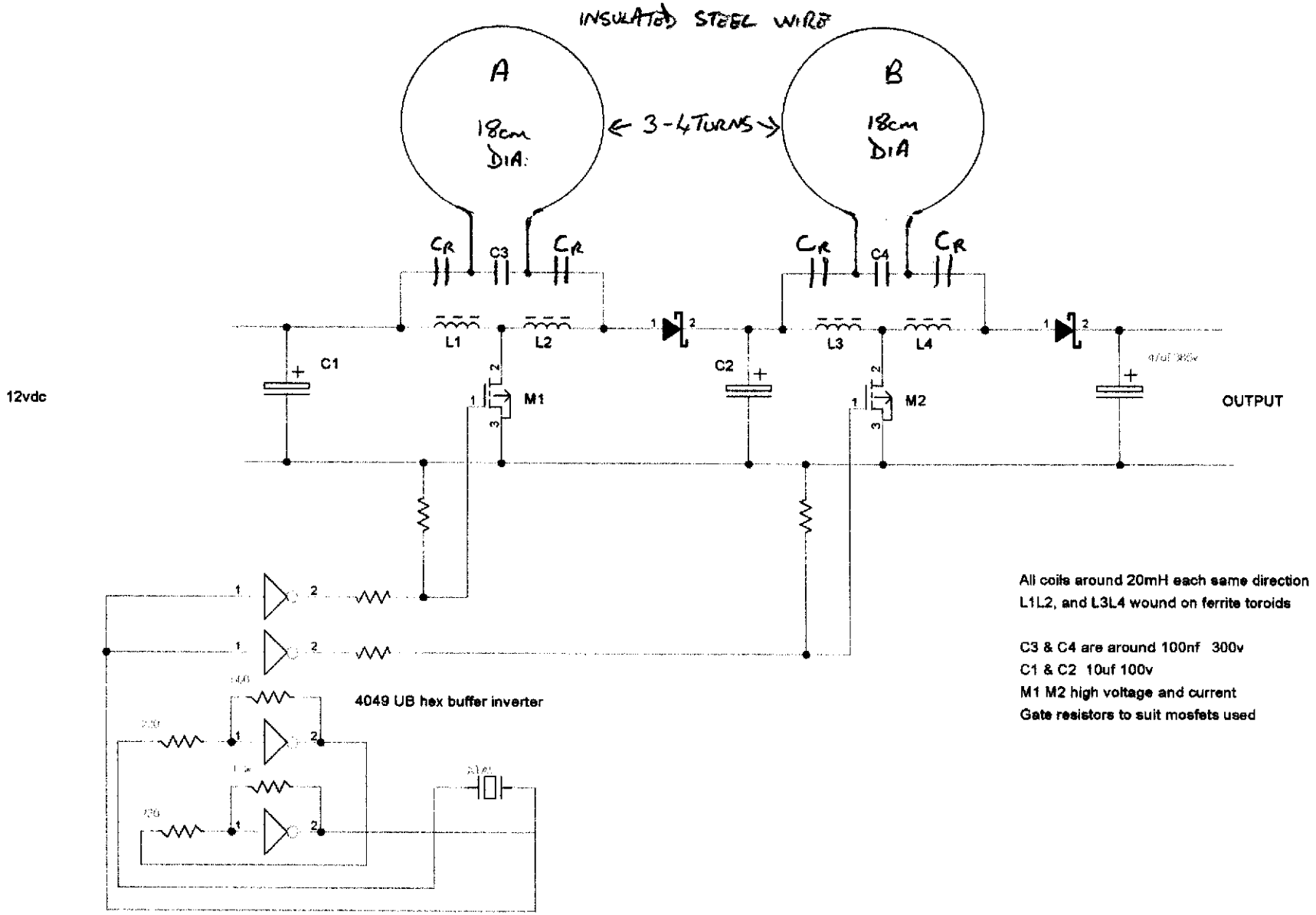

All coils around 20mH each same direction
L1L2, and L3L4 wound on ferrite toroids

C3 & C4 are around 100nf 300v
C1 & C2 10uf 100v
M1 M2 high voltage and current
Gate resistors to suit mosfets used

Title TPU DRIVER CIRCUIT CRYSTAL CONTROL		
Author M.J.Nunnerley Centraflow		
File C:\Users\centr\Pictures\TPU boost		Document
Revision 2.2	Date 03/04/2018	Sheets 1 of 1